Cambridge Assessment International Education

# Cambridge International AS & A Level

CANDIDATE NAME

CENTRE NUMBER

CANDIDATE NUMBER

*5395960624*

**PHYSICS** **9702/51**

Paper 5 Planning, Analysis and Evaluation **October/November 2021**

**1 hour 15 minutes**

You must answer on the question paper.

No additional materials are needed.

**INSTRUCTIONS**

- Answer **all** questions.
- Use a black or dark blue pen. You may use an HB pencil for any diagrams or graphs.
- Write your name, centre number and candidate number in the boxes at the top of the page.
- Write your answer to each question in the space provided.
- Do **not** use an erasable pen or correction fluid.
- Do **not** write on any bar codes.
- You may use a calculator.
- You should show all your working and use appropriate units.

**INFORMATION**

- The total mark for this paper is 30.
- The number of marks for each question or part question is shown in brackets [ ].

This document has **8** pages.


© UCLES 2021

**1** A student investigates stationary sound waves in cylindrical tubes. Fig. 1.1 shows a stationary wave pattern in a tube which is open at both ends.

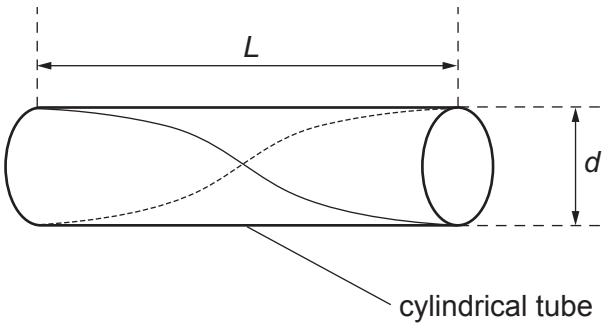


**Fig. 1.1**

The tube has length $L$ and diameter $d$. The frequency of the sound for the stationary wave pattern shown is $f$.

There are a number of different tubes available.

It is suggested that the relationship between $f$ and $d$ is

$$\frac{v}{f} = 2L + kd$$

where $v$ is the speed of sound in air and $k$ is a constant.

Design a laboratory experiment to test the relationship between $f$ and $d$.
Explain how your results could be used to determine values for $k$ and $v$.

You should draw a diagram, on page 3, showing the arrangement of your equipment. In your account you should pay particular attention to:

- the procedure to be followed
- the measurements to be taken
- the control of variables
- the analysis of the data
- any safety precautions to be taken.

© UCLES 2021

**Diagram**

.....

.....

.....

.....

.....

.....

.....

.....

.....

.....

.....

.....

.....

.....

.....

.....

.....

**2** A student investigates the discharge of a capacitor in the circuit shown in Fig. 2.1.

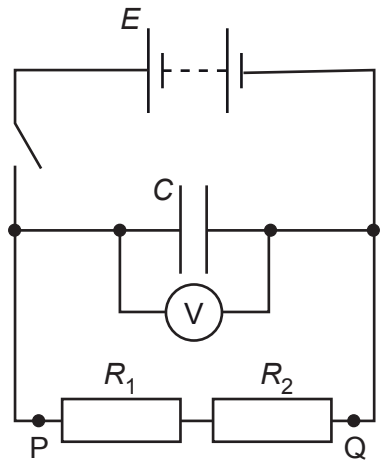


**Fig. 2.1**

The student closes the switch and charges the capacitor.

The switch is opened and a stop-watch is started. The capacitor discharges through the two resistors of resistance $R_1$ and $R_2$ connected between P and Q. At a fixed time $t$ the potential difference $V$ across the capacitor is measured.

The experiment is repeated for different values of $R_1$ and $R_2$.

It is suggested that $V$, $R_1$ and $R_2$ are related by the equation

$$\ln\left(\frac{V}{E}\right) = -\frac{t}{C(R_1 + R_2)}$$

where $E$ is the electromotive force (e.m.f.) of the battery and $C$ is the capacitance of the capacitor.

**(a)** A graph is plotted of $\ln V$ on the $y$-axis against $\frac{1}{R_1 + R_2}$ on the $x$-axis.

Determine expressions for the gradient and $y$-intercept.

gradient = .....

$y$-intercept = .....

[1]

**(b)** Values of $R_1$, $R_2$, $V$ and $\ln V$ are given in Table 2.1.

Each resistance value has a percentage uncertainty of ±5%.

**Table 2.1**

| $R_1/\text{k}\Omega$ | $R_2/\text{k}\Omega$ | $(R_1 + R_2)/\text{k}\Omega$ | $\frac{1}{R_1 + R_2}/10^{-6}\,\Omega^{-1}$ | $V/\text{V}$ | $\ln(V/\text{V})$ |
|---|---|---|---|---|---|
| 22 | 33 | | | 1.28 | 0.247 |
| 22 | 47 | | | 1.98 | 0.683 |
| 22 | 68 | | | 2.87 | 1.054 |
| 33 | 47 | | | 2.39 | 0.871 |
| 33 | 68 | | | 3.28 | 1.188 |
| 47 | 68 | | | 3.55 | 1.267 |

Calculate and record values of $(R_1 + R_2)/\text{k}\Omega$ and $\frac{1}{R_1 + R_2}/10^{-6}\,\Omega^{-1}$ in Table 2.1.

Include the absolute uncertainties in $(R_1 + R_2)$ and $\frac{1}{R_1 + R_2}$. [2]

**(c)** **(i)** Plot a graph of $\ln(V/\text{V})$ against $\frac{1}{R_1 + R_2}/10^{-6}\,\Omega^{-1}$.

Include error bars for $\frac{1}{R_1 + R_2}$. [2]

**(ii)** Draw the straight line of best fit and a worst acceptable straight line on your graph. Both lines should be clearly labelled. [2]

**(iii)** Determine the gradient of the line of best fit. Include the absolute uncertainty in your answer.

gradient = ..... [2]

© UCLES 2021

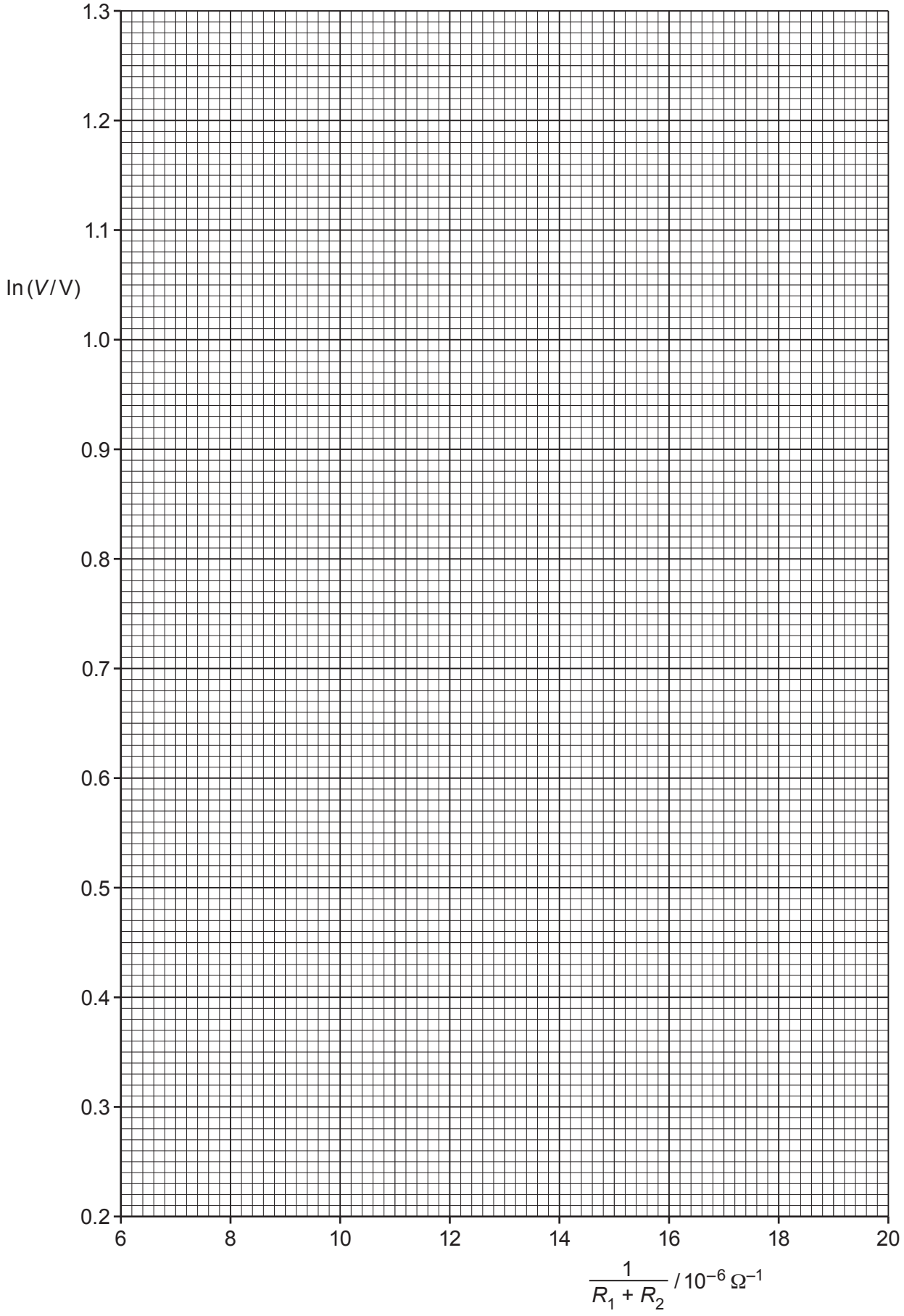
1.3
1.2
1.1
ln (V / V)
1.0
0.9
0.8
0.7
0.6
0.5
0.4
0.3
0.2
6
8
10
12
14
16
18
20
1 / R1 + R2 / 10−6 Ω−1

**(iv)** Determine the *y*-intercept of the line of best fit. Include the absolute uncertainty in your answer.

*y*-intercept = ..... [2]

**(d) (i)** Using your answers to **(a)**, **(c)(iii)** and **(c)(iv)**, determine the values of *C* and *E*. Include appropriate units.

Data: $t = (60 \pm 1)\,s$

*C* = .....

*E* = .....
[2]

**(ii)** Determine the percentage uncertainty in *C*.

percentage uncertainty = ..... % [1]

**(e)** The experiment is repeated using the same capacitor. Determine the value of $(R_1 + R_2)$ that would give a value of *V* of 5.0 V at time $t = 60\,s$.

$(R_1 + R_2)$ = ..... Ω [1]

[Total: 15]

To avoid the issue of disclosure of answer-related information to candidates, all copyright acknowledgements are reproduced online in the Cambridge Assessment International Education Copyright Acknowledgements Booklet. This is produced for each series of examinations and is freely available to download at www.cambridgeinternational.org after the live examination series.

© UCLES 2021